DIGILAB – the introduction to the world of bits and bytes

For basic experiments in digital engineering

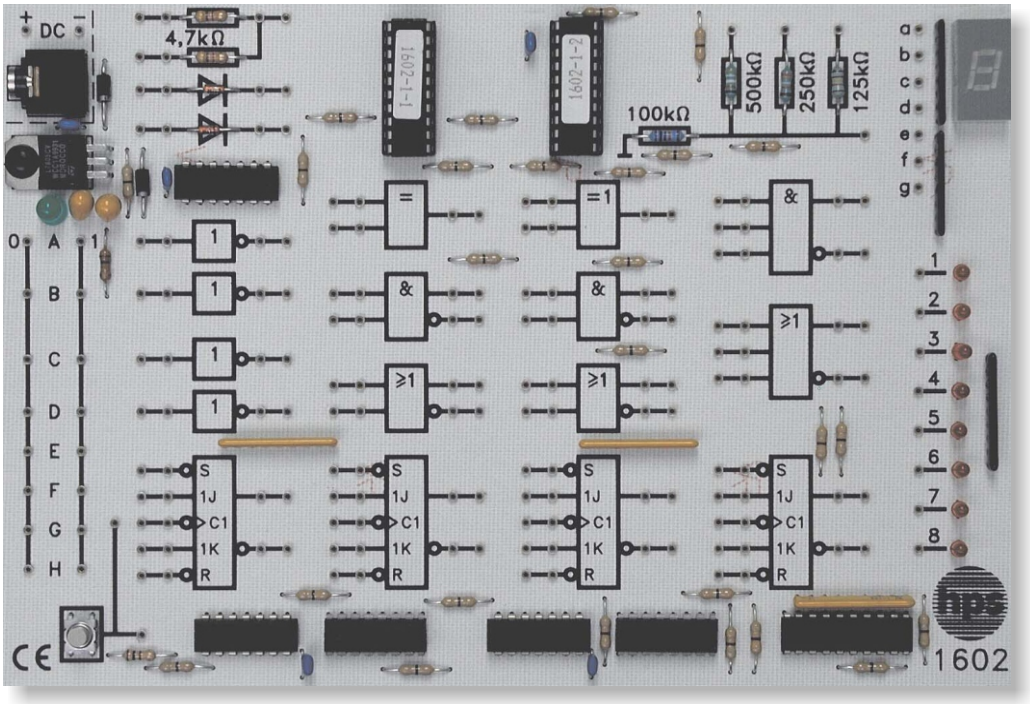

DIGILAB (Type 1602)

- **All the functions groups required for the experiments are integrated in a clear arrangement:**

  3 AND/NAND gates, 3 OR/NOR gates, 4 inverters, 1 equivalence gate, 1 antivalence gate, 4 JK flipflops, 1 display (7-segment), 8 LEDs, 1 pushbutton, 1 resistor network, 2 diodes, jacks for 0/1 states

- **Operable immediately after connecting the operating voltage (plug-in power pack)**

- **Experiments in basic logic circuits possible without additional measuring equipment**

- **Experiments in sequential and applied circuits in connection with the hps Measuring Interface**

hps SystemTechnik
Lehr- + Lernmittel GmbH
Altdorfer Strasse 16
88276 Berg (Germany)

Tel.: + 49 7 51 / 5 60 75 80
Fax: + 49 7 51 / 5 60 75 77
Web: www.hps-systemtechnik.com
E-Mail: export@hps-systemtechnik.com

Workbook for *DIGILAB*

The workbook available for the *DIGILAB* contains numerous experiments for the following topics:

- Comparison between analog and digital technology
- Logical basic circuits
- TTL circuits in practice
- Assembled digital engineering components
- Digital technology in practice
- Laws of switching algebra
- Simple circuits with logic gates
- Complete disjunctive and conjunctive normal form
- Analysis of logic switching networks
- Bistable elements
- Counters
- Register circuit
- Code converters
- Arithmetic circuits
- Digital / analog converters
- Analog / digital converters
- Displays

Technical data

- Power supply: 12 V DC (from plug-in power pack provided)
- Internal supply voltage: 5 V (TTL)
- Dimensions of the board: 190 mm x 130 mm

Recommended measuring equipment

- hps Measuring Interface (type 1620.1),
  to conduct experiments with sequential and applied circuits as well as for multi-channel display and documentation of clock and output signals